Axor Starck

Wall Lamp, Shelf / Applique murale, Tablette / Aplique mural, Repisa

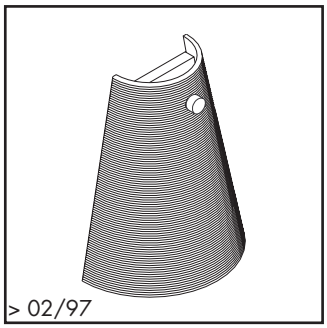

40856XX0

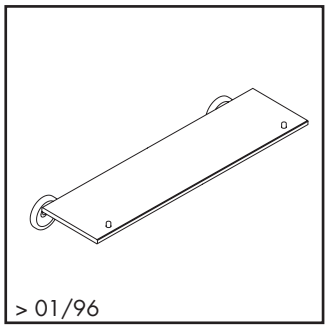

40860XX0

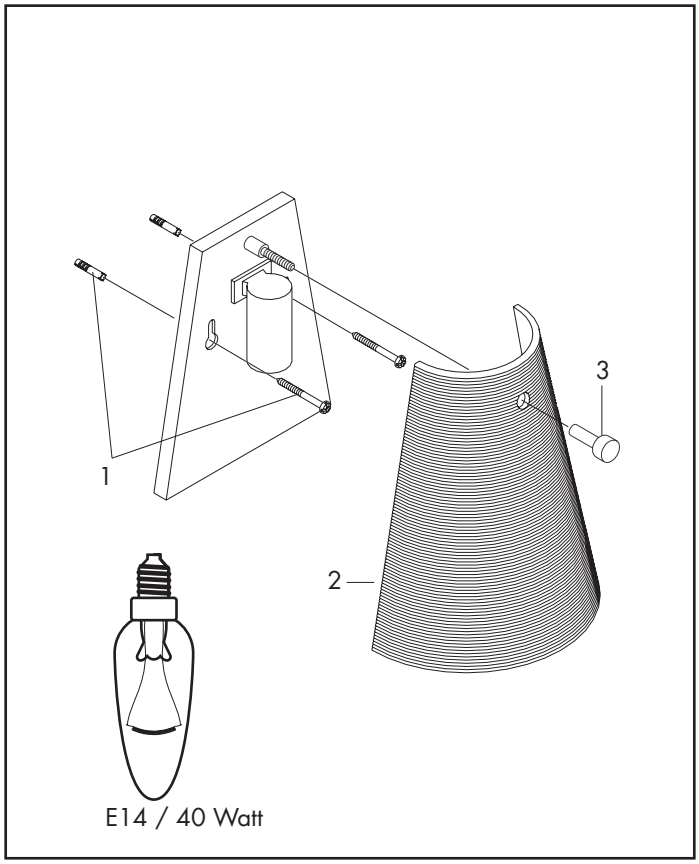

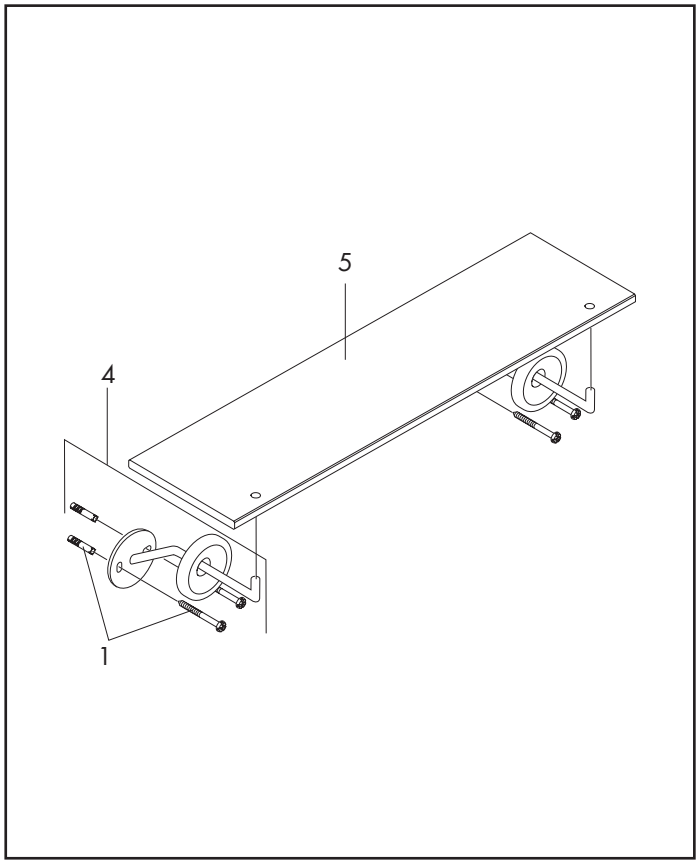

Pos.	Description	Description	Denominación	Nr./Nr./N°	
1	mounting set	set de fixation	Set de fijación	40916000	
2	light glass	globe seul	Tulipa	40097000	
3	cover	cache	Embellecedor	96314XX0	
4	support	support	Soporte completo	40869XX0	
5	shelf	tablette	Repisa	40870000	

AXOR® hansgrohe

XX = Please see page 4.1 for finish
XX = Description des codes couleur page 4.1
XX = Para el código de acabados ver página 4.1

Download from Www.Somanuals.com. All Manuals Search And Download.

Free Manuals Download Website

http://myh66.com

http://usermanuals.us

http://www.somanuals.com

http://www.4manuals.cc

http://www.manual-lib.com

http://www.404manual.com

http://www.luxmanual.com

http://aubethermostatmanual.com

Golf course search by state

http://golfingnear.com

Email search by domain

http://emailbydomain.com

Auto manuals search

http://auto.somanuals.com

TV manuals search

http://tv.somanuals.com